M4 SHERMAN 105mm HOWITZER

★REQUIRES 2 CHANNEL, 2 SERVO DIGITAL PROPORTIONAL RADIO CONTROL SYSTEM AND 6 D CELL BATTERIES

KIT NO.RT1601

TAMIYA

TAMIYA PLASTIC MODEL CO
628, OSHIKA SHIZUOKA-CITY, JAPAN

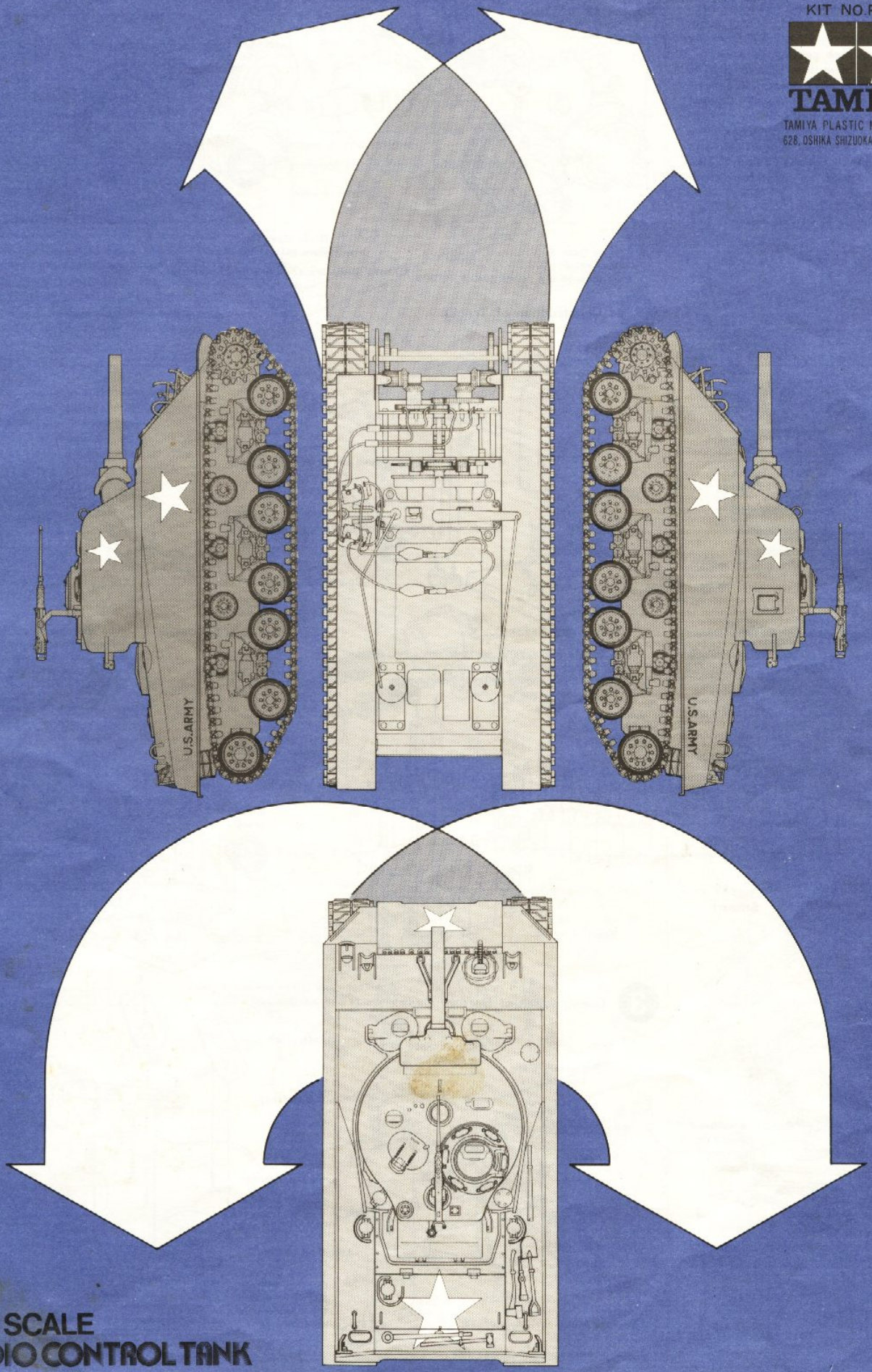

1/16 SCALE
RADIO CONTROL TANK

7511

RCTM4 シャーマン(英)・改

(★Be sure to read the following instructions carefully before starting assembly work.)

★This model tank may be run with or without radio control mechanism, which may be of the digital proportional type or the single pushbutton type. Make sure you have the necessary tools and radio control mechanism shown in this booklet ready for use before setting to work.

★Blue parts in the figures are to be cemented. Two types of cement are necessary. Metal Cement (black and red tube) which is suitable for use with metal parts. This, of course, should be applied to parts indicated with "Metal Cement". ABS Cement should be used on other parts.

1 (Choice of Driving Gear)

After selecting driving gears, lubricate gears as shown below. And run the motors at least five minutes. Running gears without oil will cause trouble.

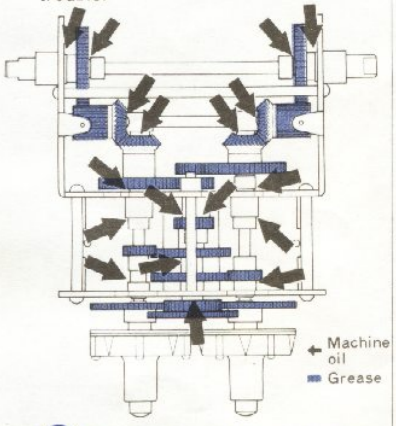

3 (Construction of Battery Case)

After constructing the battery case, apply stickers "+" and "−" as shown below.

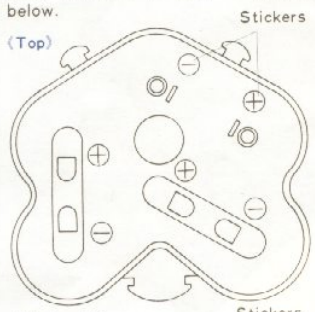

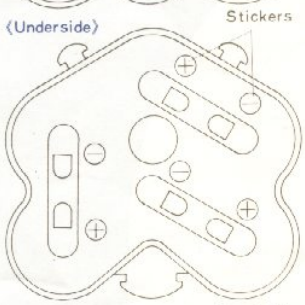

(How to Fix Rubber Band) ★Rubber band should not be tightened too much.

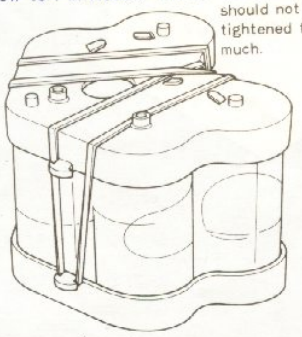

1 Choice of Driving Gear

★Apply Machine oil and Grease as shown in the left figure.

★Replace gears and shafts, using the hexagon wrench supplied.

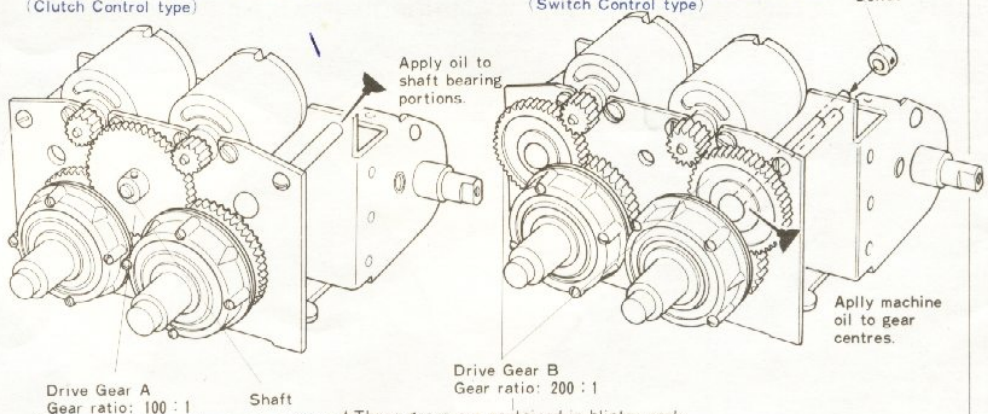

★Be sure to use rechargeable battery. ★These gears are contained in blister pack.

2 Construction of Tracks

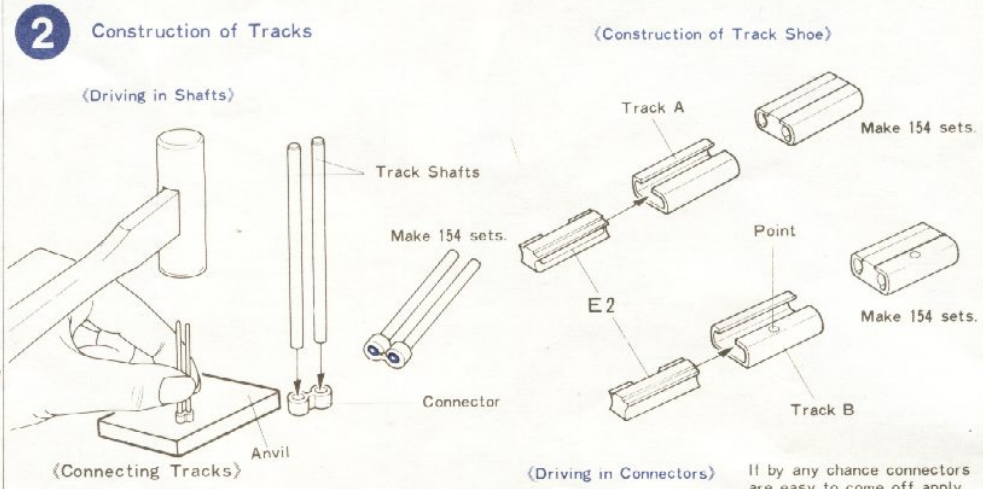

(Connecting Tracks)

★Assemble two sets of parts to make two tracks of 77 links each.

★Shaft points should be on the same side.

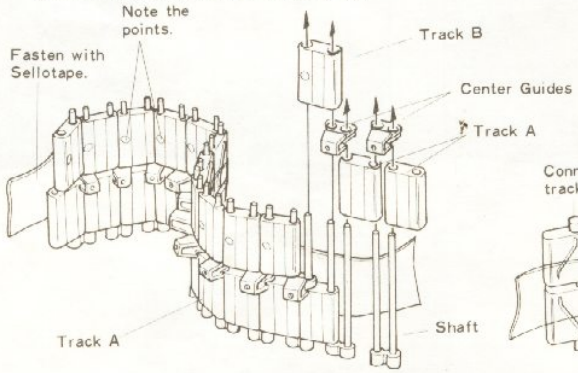

(Driving in Connectors)

If by any chance connectors are easy to come off, apply rapid cure adhesives. (Rapid cure adhesive should be handled with great care.)

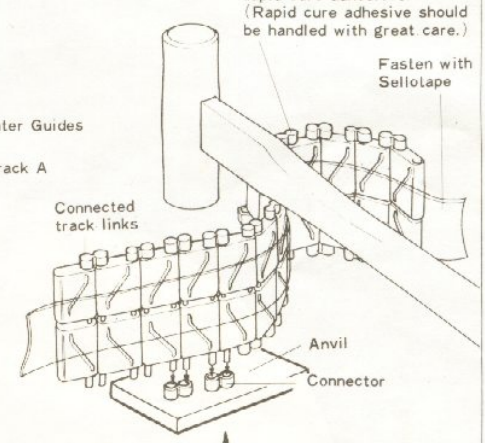

3 Construction of Battery Case

★This case is not needed if you are to use Accumulator.

(Top)

After construction, apply stickers as shown left.

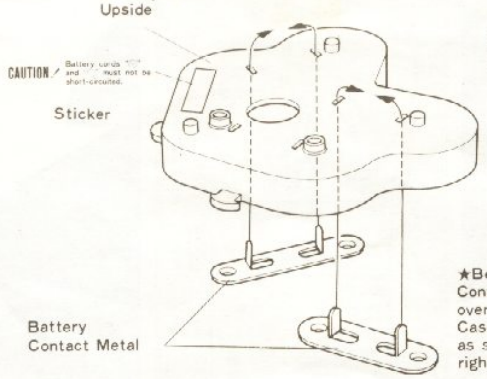

(Underside)

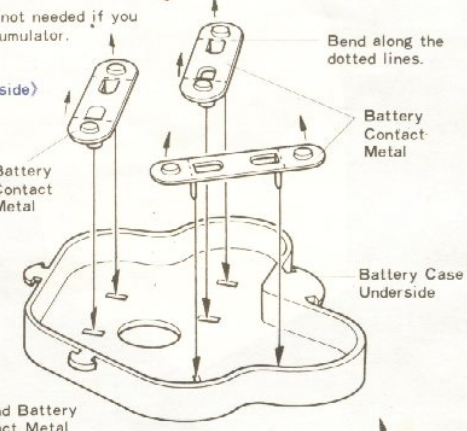

★Bend Battery Contact Metal over on Battery Case Underside as shown at right.

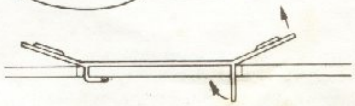

4 〈Construction of Spring Carriers〉

Fix dummy spring cylinders in place with Metal Cement. Construct 12 spring carriers. Allow them to stand until Metal Cement dries completely.

5 〈Construction of Shock Absorbers〉

Insert shock absorber B into shock absorber A. Bend the pin outward with a screwdriver as shown in the figure.

6 〈Construction of Clutch Engaging Device〉

The parts of the clutch engaging device are movable. Do not use cement. They must be assembled with four wood screws.

7 〈Construction of Suspension Units〉

Bend the end lugs of shock absorber outward, fix the suspension arm in place, then bend back the end lugs to original position with pliers or the like. The model needs six suspension units, three for each side.

8 〈Fixing of Gear Box〉

Fix ①, ② and ③ in this order. Then, adjust the clutch with reference to the figure below. Clearance between the clutch and F4 should be adjusted to about 0.3mm, i.e. the thickness of the paper for metal fittings parts pack. Also see the explanation in the manual.

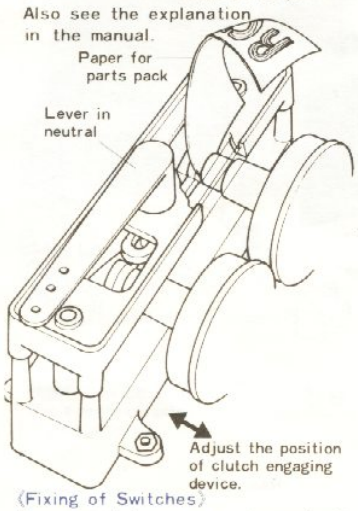

〈Fixing of Switches〉

These switches are not required when you use a radio control unit of the single channel pushbutton type.

★Be careful not to fix switches upside down. See page 7.

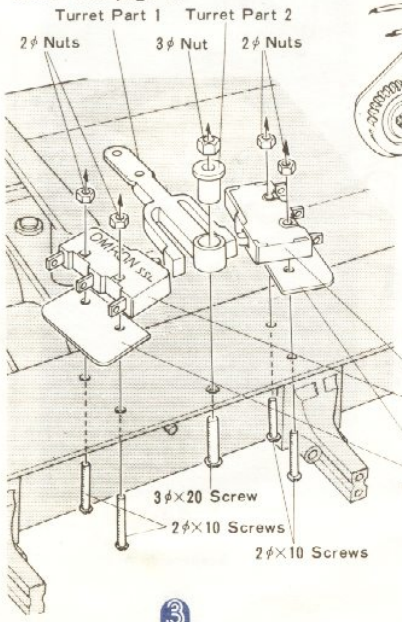

4 Construction of Spring Carriers

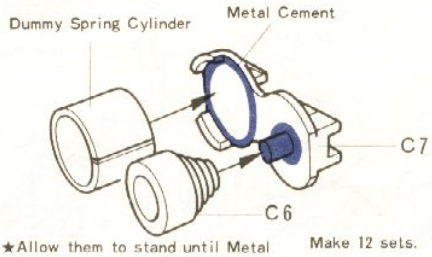

★Allow them to stand until Metal Cement dries completely.

Make 12 sets.

5 Construction of Shock Absorbers

Make 6 sets.

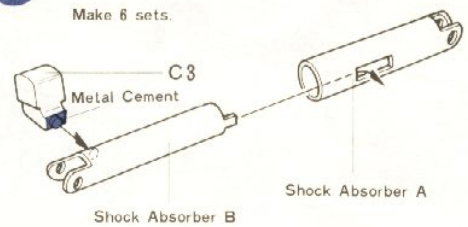

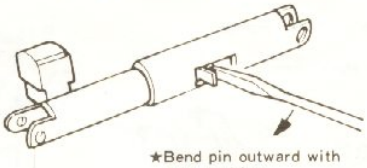

6 Construction of Clutch Engaging Device

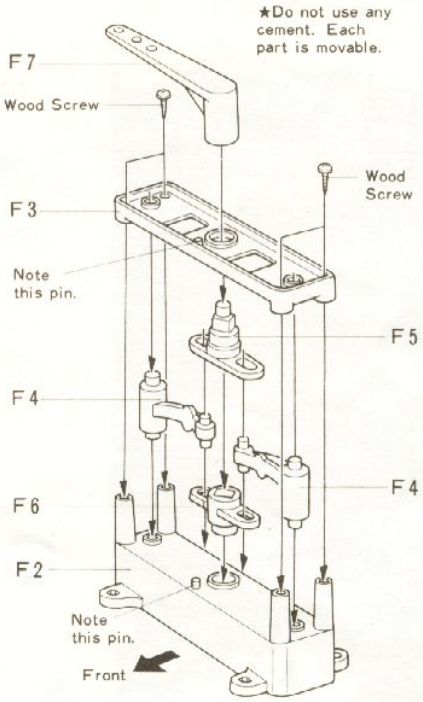

7 Construction of Suspension Units

Make 6 sets.

〈Spring Mechanism〉

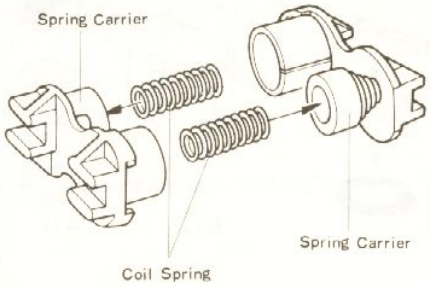

Make 6 sets.

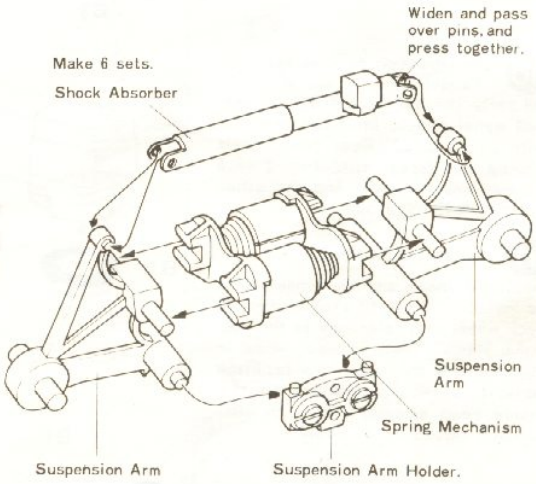

8 Fixing of Gear Box

★Screws should be locked with ABS Cement.

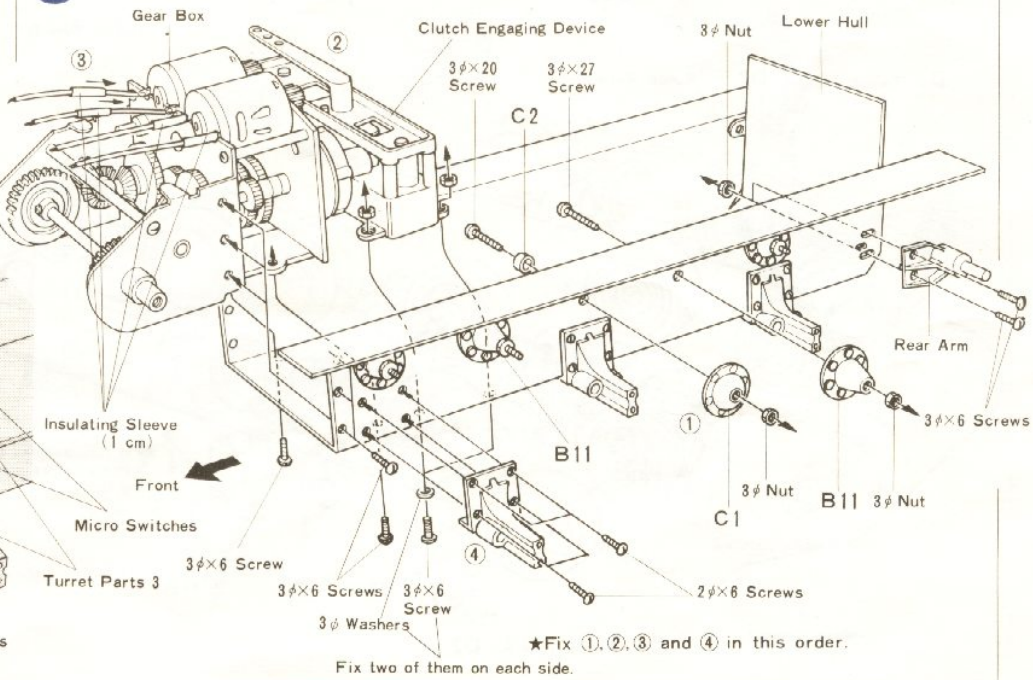

★Fix ①, ②, ③ and ④ in this order.

9 〈Fixing of Suspension Units〉

Fix suspension units, hull holder clips and gear box end cover with specified screws.

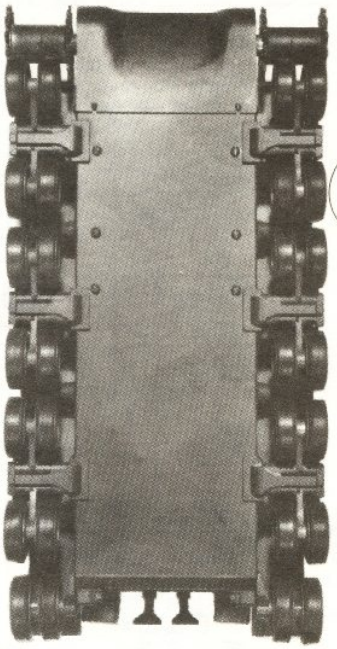

10 〈Construction of Rear Hull Panel〉

All parts (except B2 and B3) for rear hull panel should be fixed in place with poly cap E2. Rear panel itself should be fixed with two 2φ×6 screws one for right and the other for the left hand side.

11 〈Installation of Wheels〉

Now, road wheels and idler wheels must be installed. First, fit a rubber tyre to each wheel with reference to the sectional views. Then, fix each wheel in place with a poly cap. To facilitate work, it is recommended to fit the inside road wheels first, with suspension moved up or down.

9 Fixing of Suspension Units

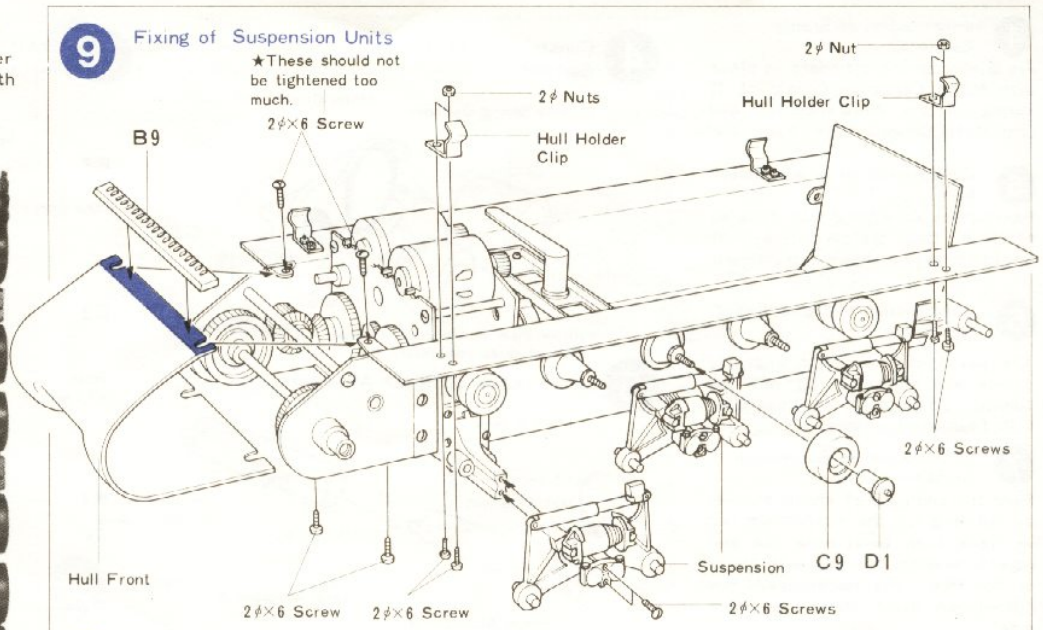

10 Construction of Rear Panel

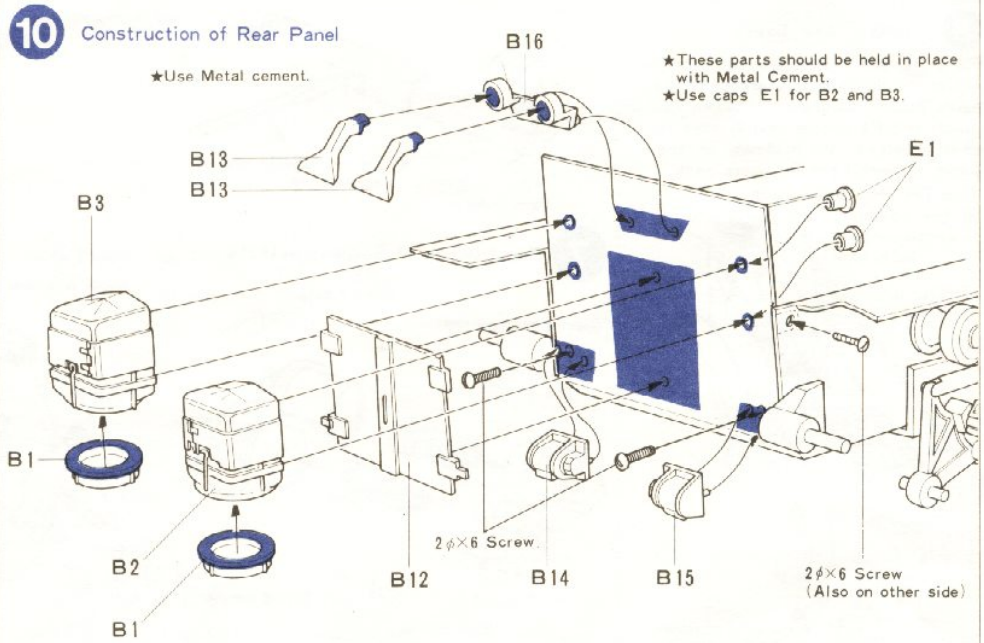

11 Installation of Wheels

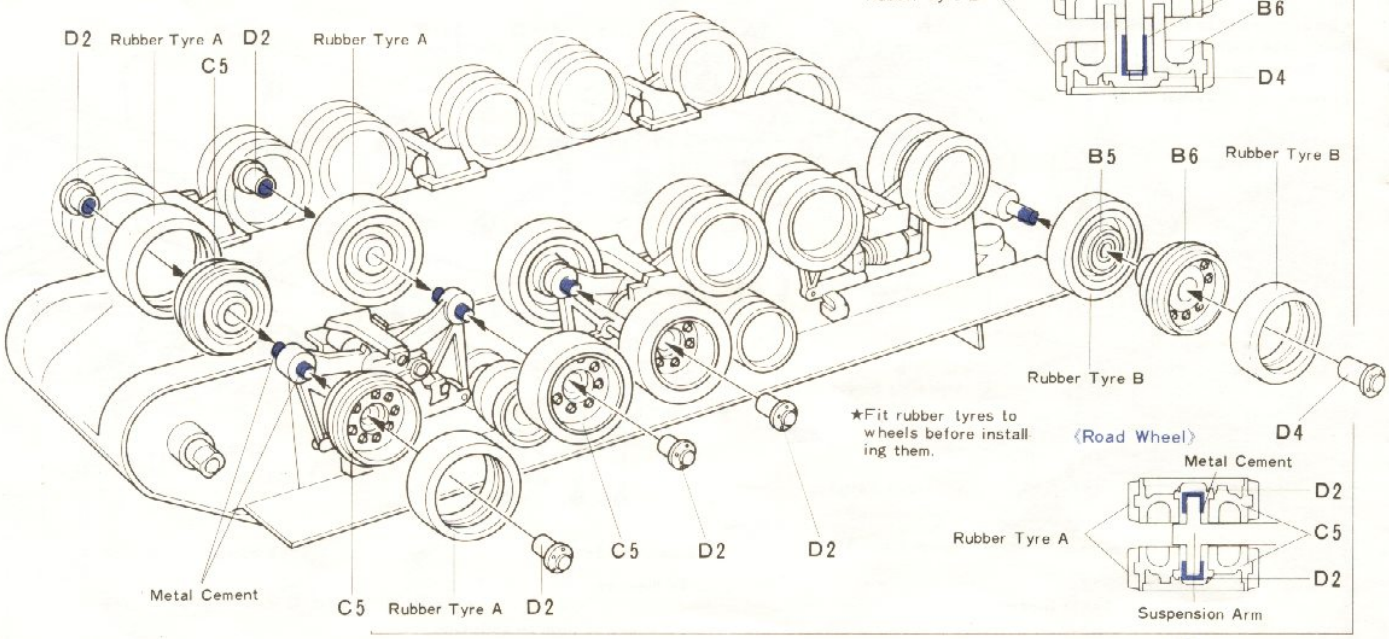

12 〈Installation of Tracks〉

Tracks should be installed together with sprocket drive wheel. Tighten 5φ×10 screw until sprocket wheel engages with track completely. Then, adjust track tension. See "Track tension" of ❻ Running, (1) "Inspection before Running" in the manual.

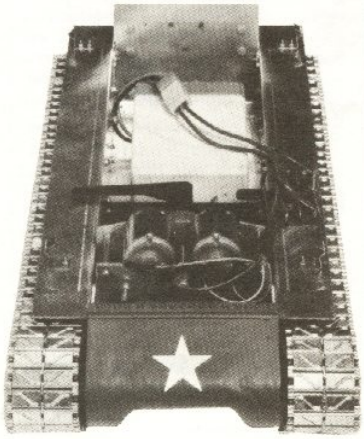

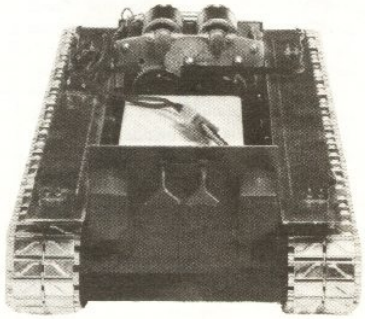

13 〈Fixing of Upper Hull Holders〉

Cement four upper-hull holders B10 firmly.

14 〈Fixing of Upper Hull Parts〉

Fix upper hull parts with reference to the photograph below.

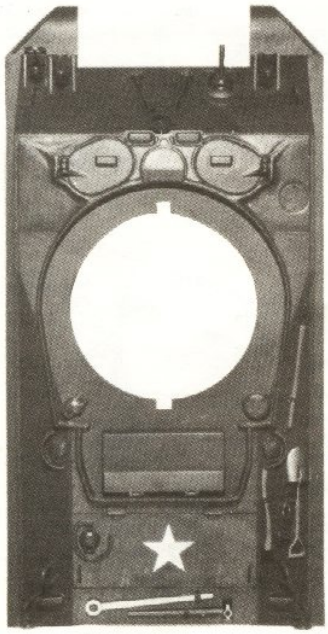

12 Installation of Tracks

★Read the manual and make a running-in.

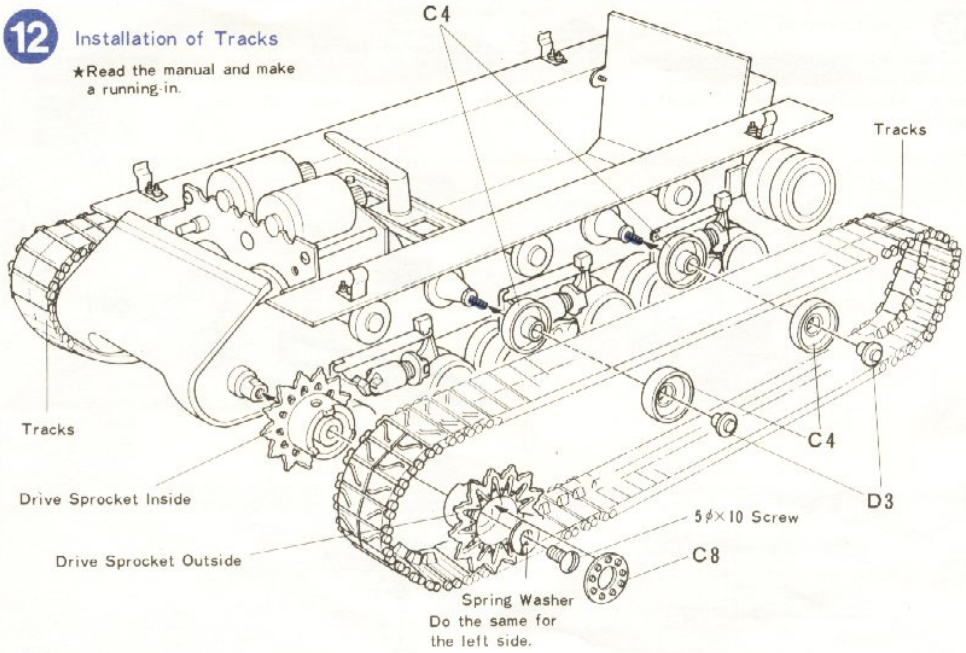

13 Fixing of Upper Hull Holders

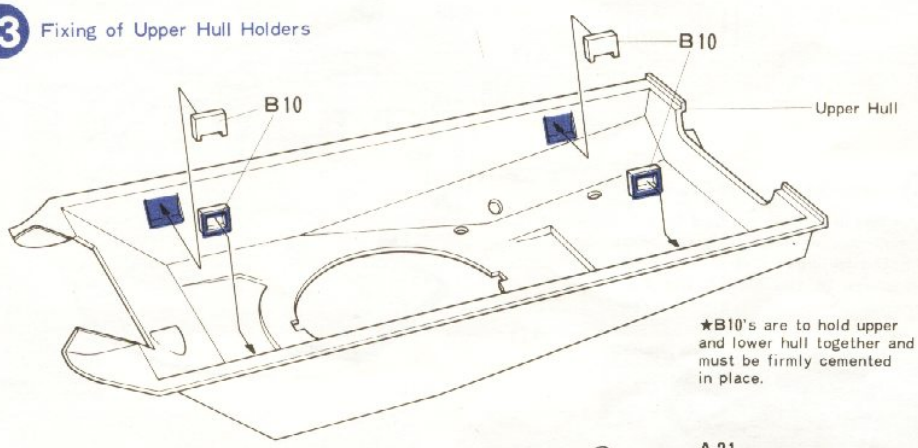

14 Fixing of Upper Hull Parts

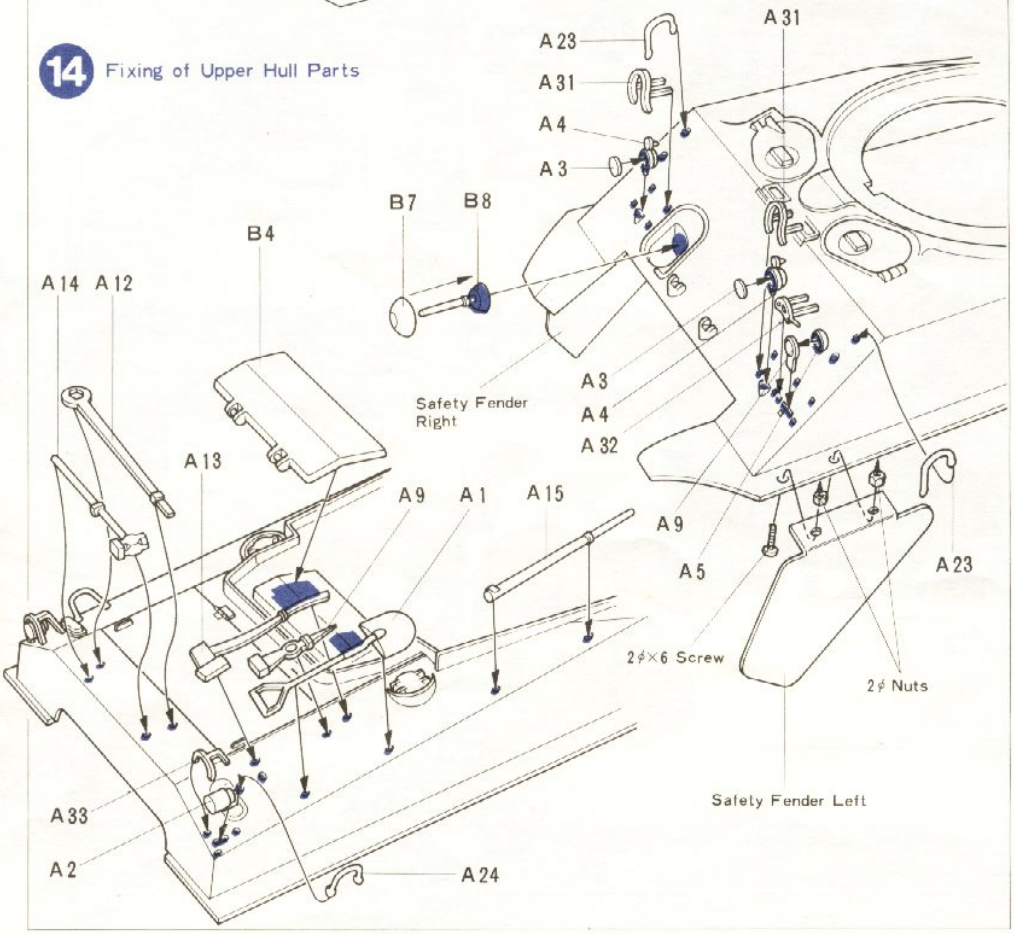

15 〈Construction of Turret〉

Gun barrel is designed to move up and down. A19 and A21 should be just fitted to A11. —They must not be cemented.

Plan View

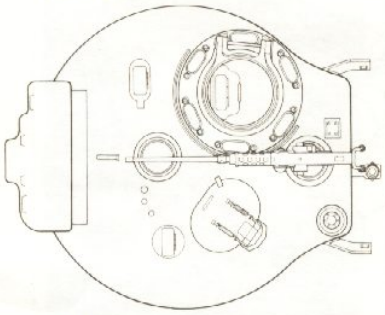

Side View

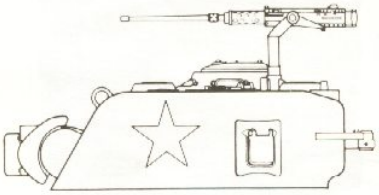

16 〈Locating Upper and Lower Hull〉

Upper and lower hull are held together by hull holder clips. Turret must be fitted to upper hull in the direction shown in the figure and then turned in the direction of the arrow.

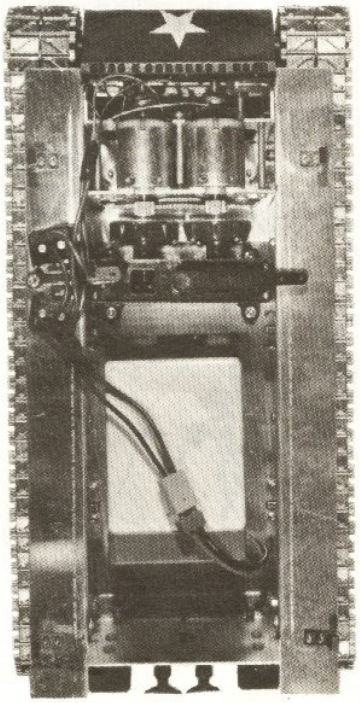

15 Construction of Turret

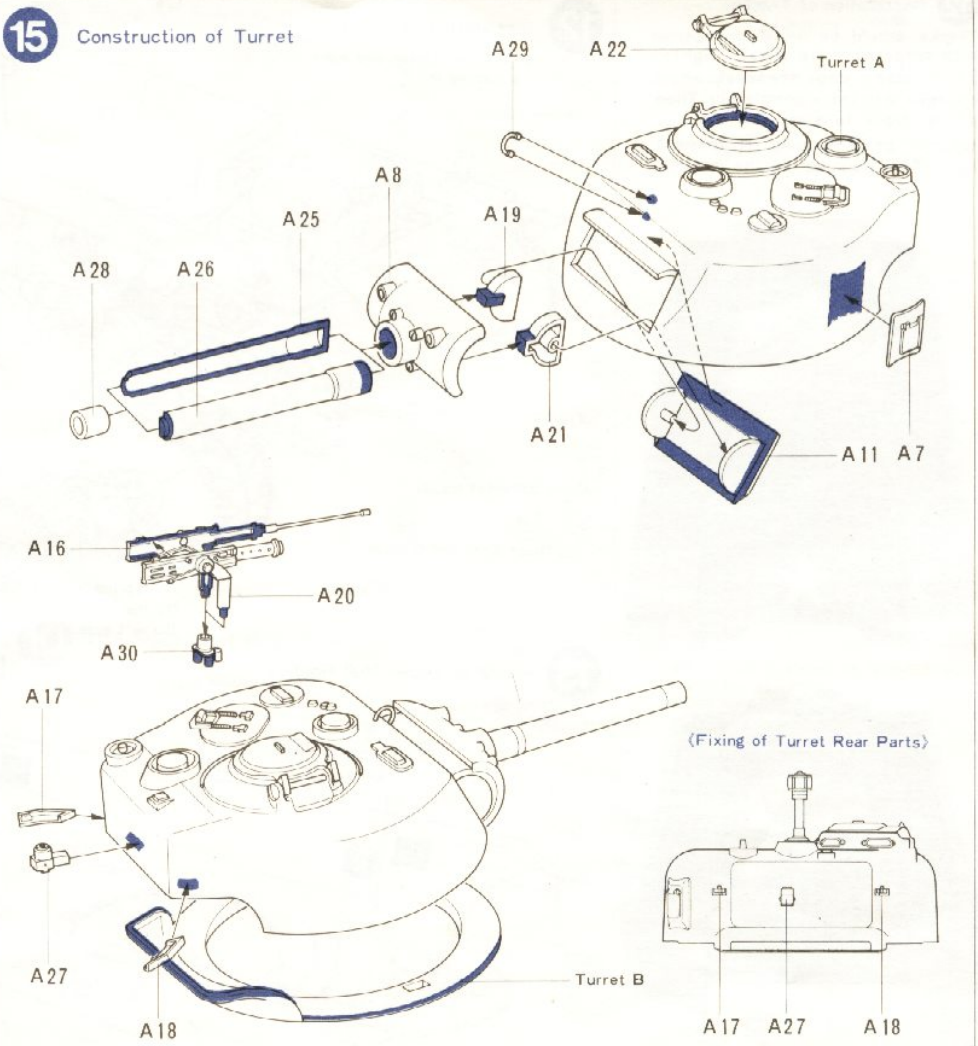

16 Locating Upper and Lower Hull

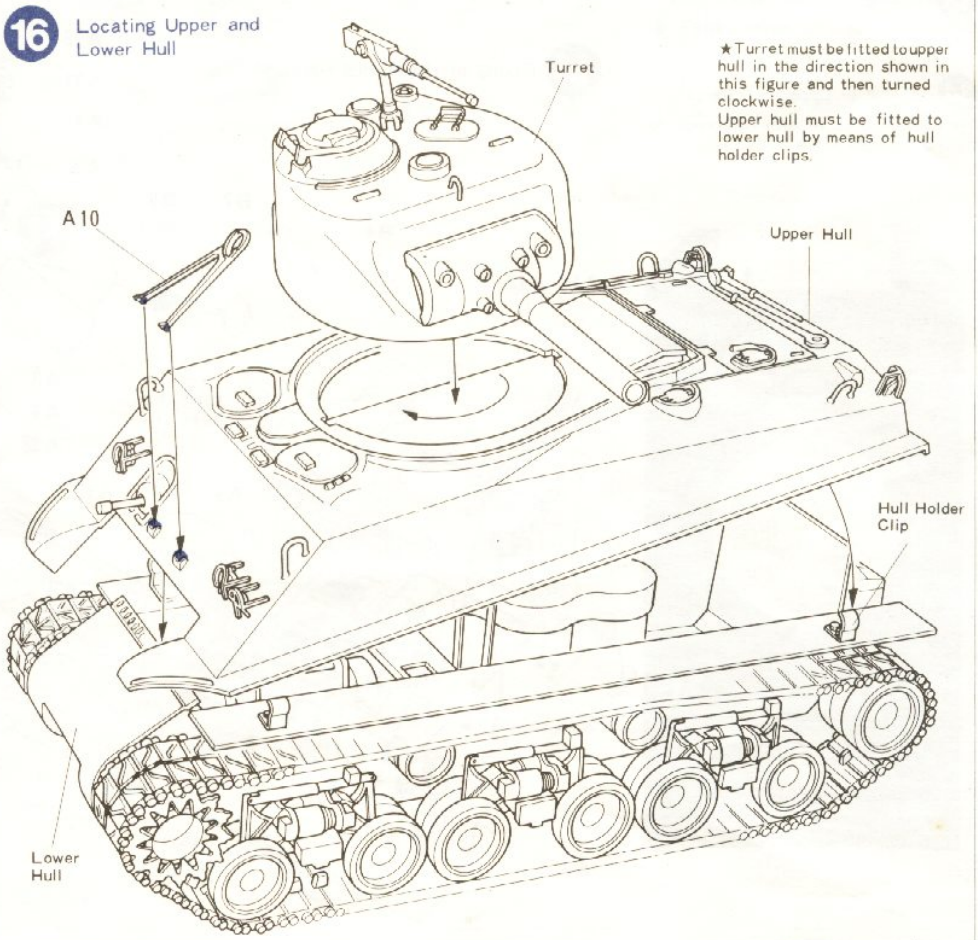

MOUNTING OF RADIO CONTROL MECHANISM

〈Mounting of Radio Control Mechanism〉

The figures at right show three installation examples, one with radio control mechanism of the digital proportional type, one with that of the single pushbutton type, and one with no such mechanism. Necessary items for each of them are specified below and must be properly mounted.

〈Necessary Items (Digital Proportional Type.〉 ·

R/C outfit with two or more channels.
Totally enclosed storage battery (6 v. 4 amp.)
Charger (for 6 v.)
Alligator clips or connectors
Double-sided adhesive tape.

〈Note〉

Receiver, servos, etc. vary in shape and size according to makes. Some consideration may be needed in mounting them on the body.
Servo arm and rod should not come into contact with the body. If they touch the body, it is recommended to put a base under the servo to raise it, or fix the servo to the side of the body with double-sided adhesive tape.
Servo arms are available in various shapes as shown in the figure below. The amount of movement communicated through the rod can be adjusted by changing the hole.

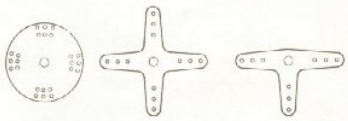

Bend the rod as shown in the figure at right. This will serve as a cushion should the rod receive abnormal force and afford a means for adjusting rod length.

〈Necessary Items (Single Channel Pushbutton Type)〉

Transmitter and receiver set of the single pushbutton type for model tanks.
Six DMM13 Mn1300 D Cell batteries.
Servo base (150 mm long, 50 mm wide).
Styrene sheet, 1.2 mm thick is recommended.
Double-sided adhesive tape.

〈Fixing of Antenna〉

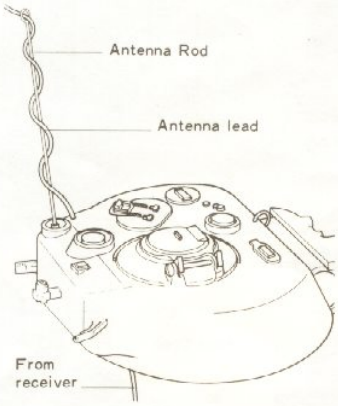

★Antenna rod should be used as switch rod when radio control mechanism is not employed.
★Radio control mechanism should be fixed in place with double-sided adhesive tape or with screws and nuts. After that, a trial-run should be made with reference to ❻ and ❼ in the manual.

〈Digital Proportional Type〉

When your tank move backward in forward position, change "+" and "−" clips of power sourse.

Red Lead
Blue Lead
Clutch lever operating rod
Clutch operating servo
Receiver
Power source
Accumulator (Storage Battery)
Blue Lead
Red Lead
Insulating Sleeve
Switch operating rod
Switch operating servo
It is recommended to use alligator clips or connectors.
★Insulate them with vinyl tape or the like to prevent short circuit.

〈Note in Mounting〉

The amount of movement available from the servo varies according to holes in servo arm.
Rod
Fix with double sided tape.
Clutch lever
Servo arms are available in various shapes.
Servo arm
Plan View
Bend the top.
Rod
Clutch lever
Bend the rod at the centre and make fine adjustment.
Side View
The servo arm should not come into contact with the body side.
Servo arm
Servo

〈Single Pushbutton Type〉

When your tank move backward in forward position, change "+" and "−" of power sourse.

Power source for Receiver
Power source for Servo.
Red Lead
Blue Lead
Insulating Sleeve
D cell batteries box
Servo
Receiver

〈Non-Radio Control Mechanism Type〉

Red Lead
Blue Lead
D cell batteries box
Micro Switches
Use Antenna Rod

Bend the end in this way.

PAINTING APPLYING DECALS

〈Painting〉
Painting is made not to give different colours to parts but to set off their shape and function. The model tank illustrated at right is painted in four colours, which make it look heavier. The name and use of each colour are shown at the bottom. (See the figures at right.)

〈Before Painting〉
Remove all dust, dirt, and adhesive smears before attempting any painting. Remember painting does not generally hide bad workmanship. Remove excessive glue or joins with a file, sharp knife or very fine emery cloth.

〈Order of Painting〉
Keep in mind that parts in general should be painted after they are constructed. Parts to be of the same colour should be painted after they are cemented together and their joints are smoothed. There are some parts which can not be easily painted after they are constructed, and these, of course, should be painted before construction.

〈Painting Tools〉
Get brushes, small plates and rag ready for use. It is recommended to use brushes with a long soft tip which are intended for use in designing.
After painting is completed, be sure to remove paint from the brushes with lacquer thinner (cheap one will suffice) and wash them in water. Keep in mind that lacquer thinner will melt plastic.

〈Fire Danger〉
Paint and solution have danger of catching fire. They must be kept away from fire.

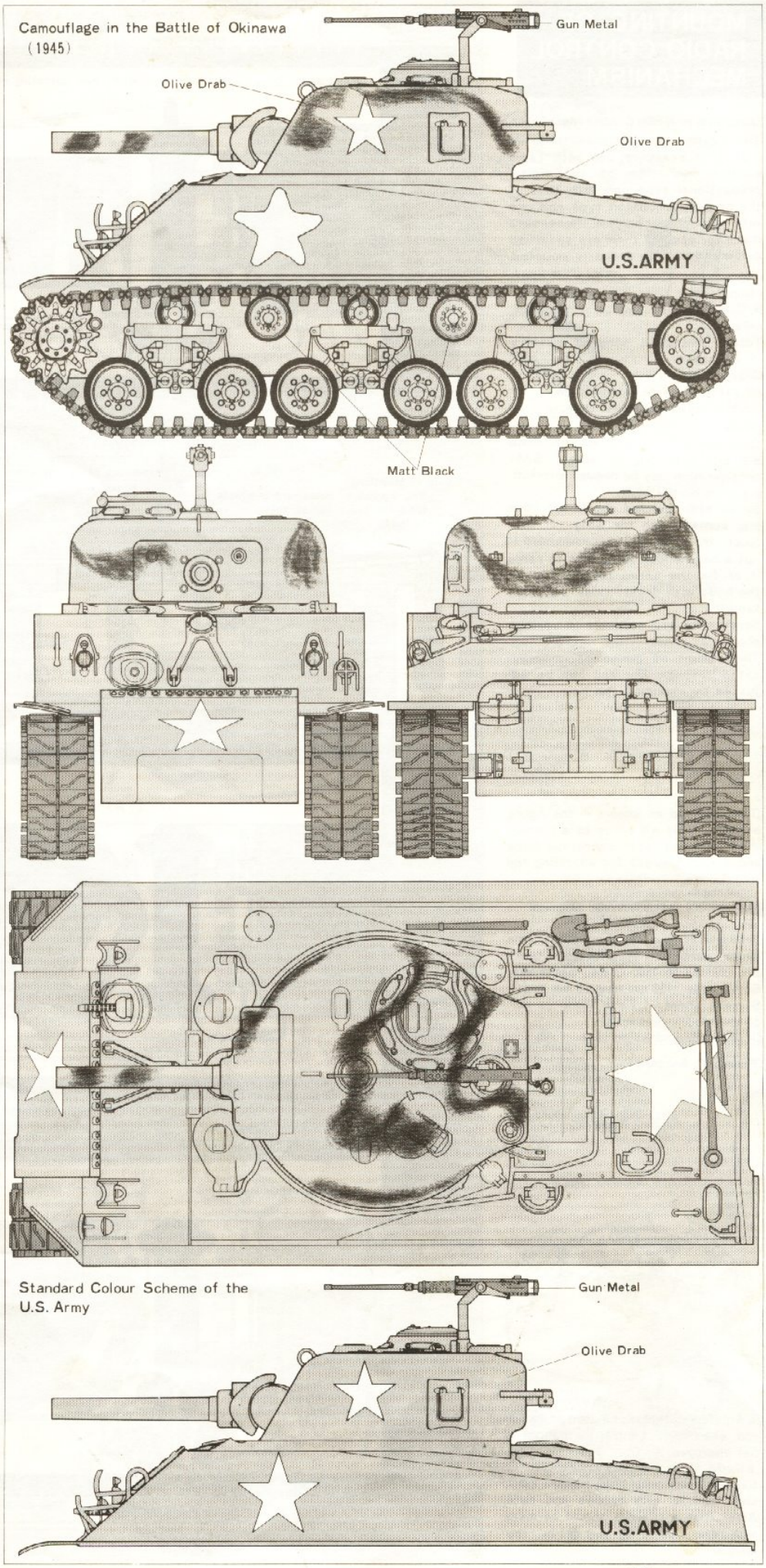

Olive Drab
The colour for the vehicle overall. When you paint wide areas, be careful to paint uniformally.

Dark Yellow
Or Sand. This colour was used as camouflage colour. This colour must be graded on a basic colour using a cutted old paint brush or the like.

Gun Metal
The colour which simulates to unpainted iron skin. Paint this colour to parts such as machine gun and tools which are made of iron.

Matt Black
Use this colour to paint rubber tyres on support rollers.

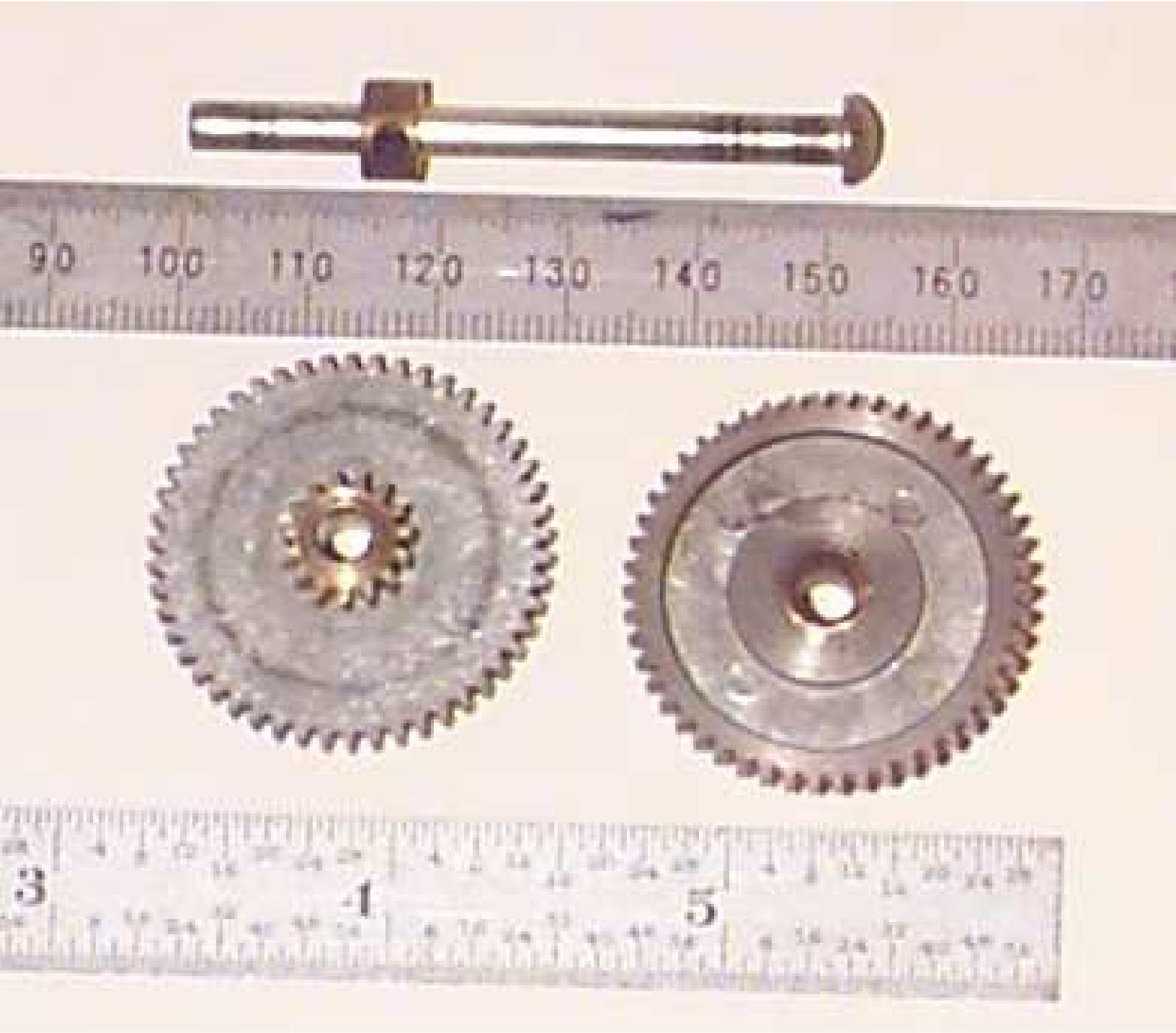

RT-1601 alternate gears